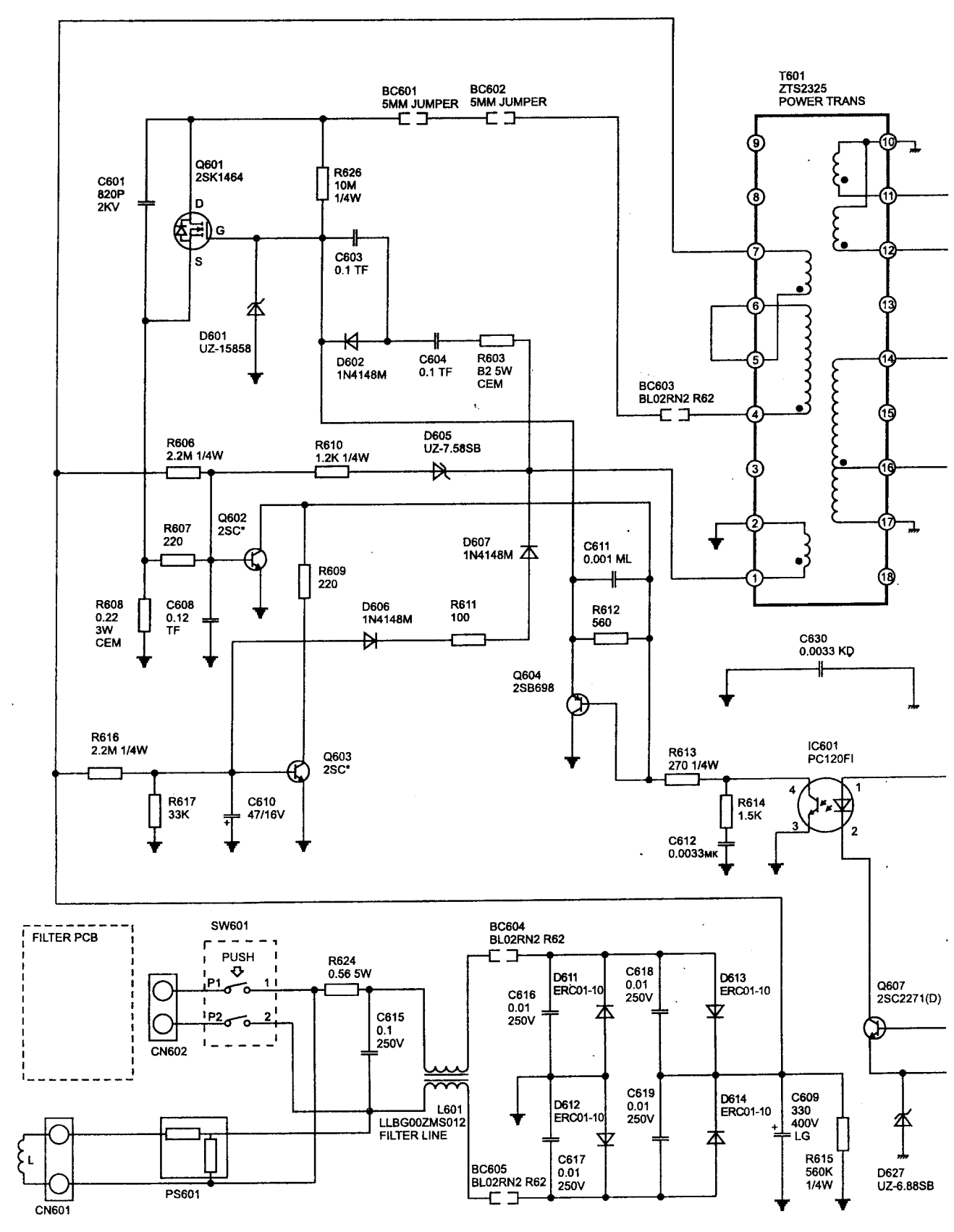
BC601
5MM JUMPER
BC602
5MM JUMPER
T601
ZTS2325
POWER TRANS
C601
820P
2KV
Q601
2SK1464
D
G
S
R626
10M
1/4W
C603
0.1 TF
D601
UZ-15858
D602
1N4148M
C604
0.1 TF
R603
B2 5W
CEM
BC603
BL02RN2 R62
R606
2.2M 1/4W
R610
1.2K 1/4W
D605
UZ-7.58SB
R607
220
Q602
2SC*
D607
1N4148M
C611
0.001 ML
R609
220
R608
0.22
3W
CEM
C608
0.12
TF
D606
1N4148M
R611
100
R612
560
C630
0.0033 KD
Q604
2SB698
R616
2.2M 1/4W
Q603
2SC*
R613
270 1/4W
IC601
PC120FI
R617
33K
C610
47/16V
R614
1.5K
C612
0.0033мк
FILTER PCB
SW601
PUSH
P1
1
P2
2
CN602
R624
0.56 5W
BC604
BL02RN2 R62
C616
0.01
250V
D611
ERC01-10
C618
0.01
250V
D613
ERC01-10
Q607
2SC2271(D)
C615
0.1
250V
L601
LLBG00ZMS012
FILTER LINE
D612
ERC01-10
C619
0.01
250V
D614
ERC01-10
C609
330
400V
LG
R615
560K
1/4W
D627
UZ-6.88SB
C617
0.01
250V
BC605
BL02RN2 R62
L
CN601
PS601

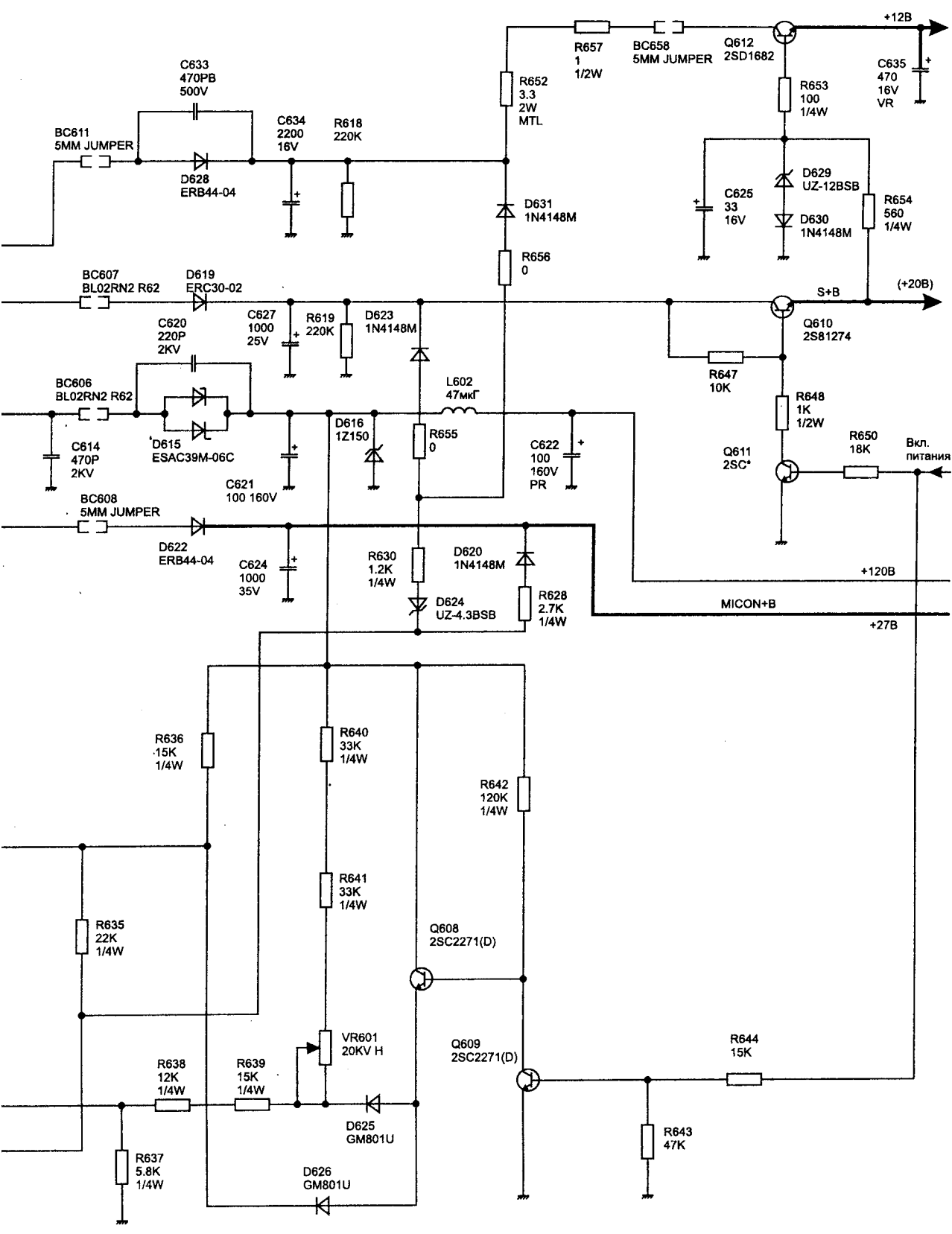
+12B
R657
1
1/2W
BC658
5MM JUMPER
Q612
2SD1682
C635
470
16V
VR
C633
470PB
500V
R652
3.3
2W
MTL
R653
100
1/4W
BC611
5MM JUMPER
C634
2200
16V
R618
220K
D628
ERB44-04
D629
UZ-12BSB
C625
33
16V
R654
560
1/4W
D631
1N4148M
D630
1N4148M
R656
0
BC607
BL02RN2 R62
D619
ERC30-02
S+B
(+20B)
C620
220P
2KV
C627
1000
25V
R619
220K
D623
1N4148M
Q610
2S81274
R647
10K
BC606
BL02RN2 R62
L602
47мкГ
R648
1K
1/2W
D616
1Z150
R655
0
C614
470P
2KV
D615
ESAC39M-06C
C622
100
160V
PR
Q611
2SC*
R650
18K
Вкл.
питания
C621
100 160V
BC608
5MM JUMPER
D622
ERB44-04
C624
1000
35V
R630
1.2K
1/4W
D620
1N4148M
+120B
D624
UZ-4.3BSB
R628
2.7K
1/4W
MICON+B
+27B
R636
15K
1/4W
R640
33K
1/4W
R642
120K
1/4W
R641
33K
1/4W
R635
22K
1/4W
Q608
2SC2271(D)
VR601
20KV H
Q609
2SC2271(D)
R644
15K
R638
12K
1/4W
R639
15K
1/4W
D625
GM801U
R643
47K
R637
5.8K
1/4W
D626
GM801U